KEENCUT **CUTTER HEAD** - SPARE PART LISTINGS

KEENCUT Sabre
GENERAL PURPOSE CUTTER

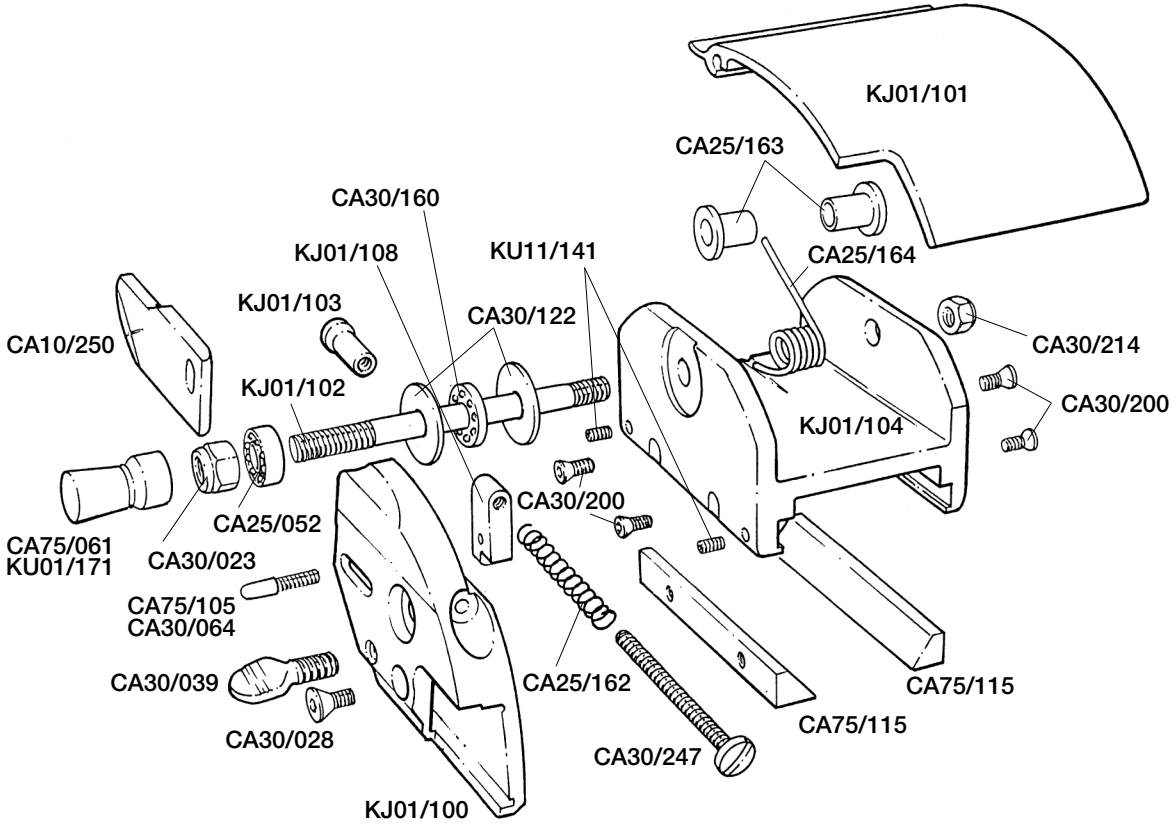
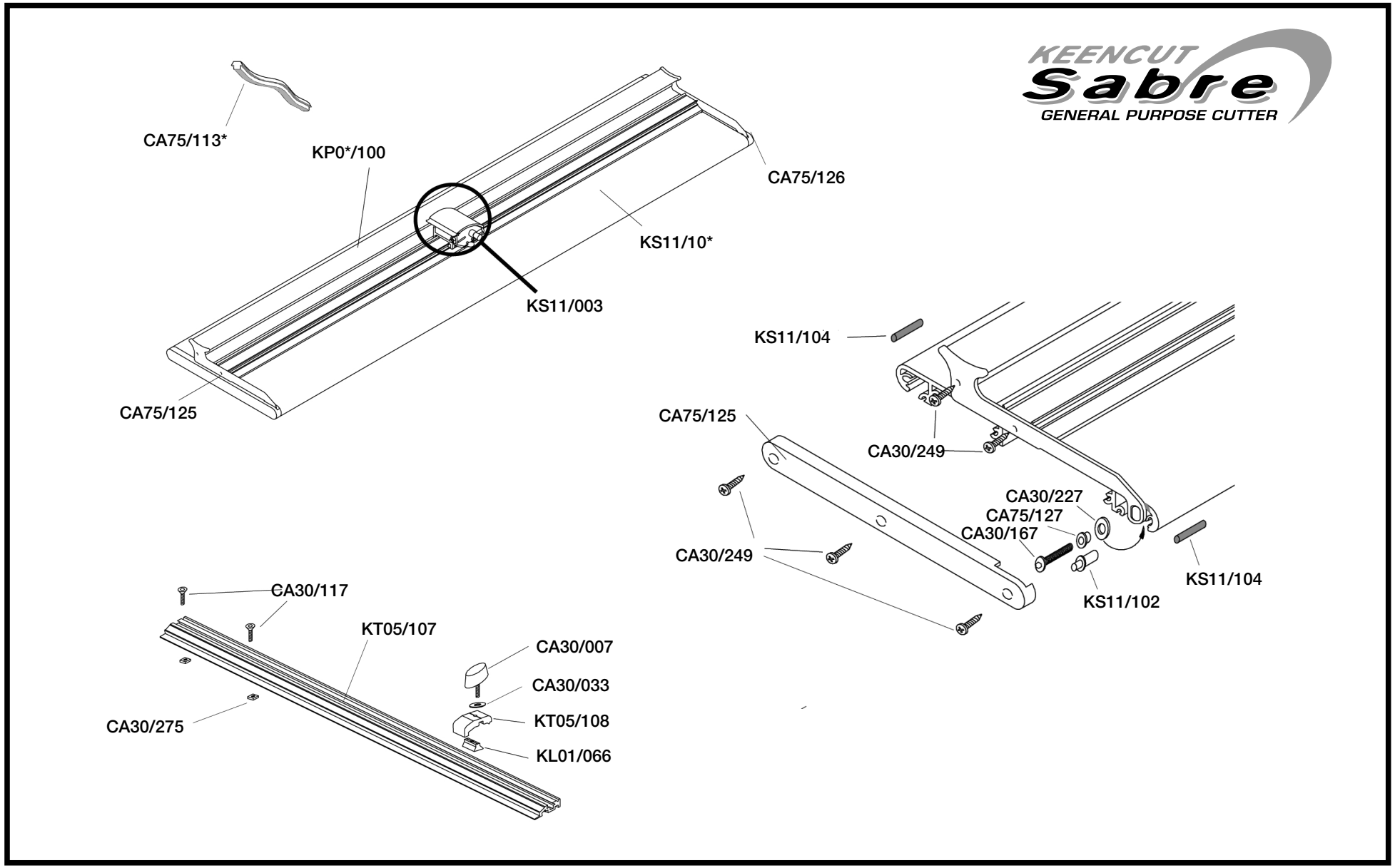
KEENCUT SPARE PART LISTINGS