Excalibur 3S user guide – Get to know your cutter

KEENCUT

Contents

1. Get to know your cutter 2
1.1 Using the clamp 2
1.2 The multi-tool cutter and the counterbalance 4
1.3 Using & changing the cutting blade 6
1.4 Changing the scoring blade 9
1.5 Changing the twin wheel cutter 10

1. Get to know your cutter

1.1 Using the clamp

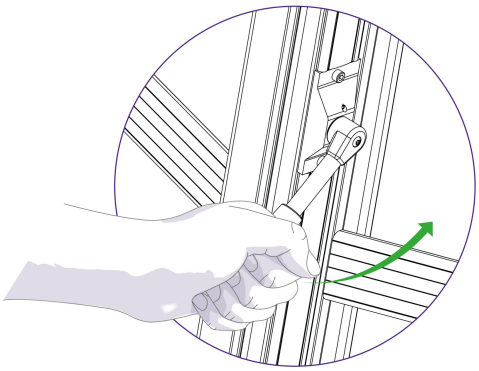

The clamping system enables the operator to control the grip pressure by means of an integral friction brake, that maintains the clamping force at the pressure applied by the operating lever. Soft materials can be held firmly without sustaining damage and solid materials are held rigidly without movement. By following the guidelines below it will help you to get the most from the machine.

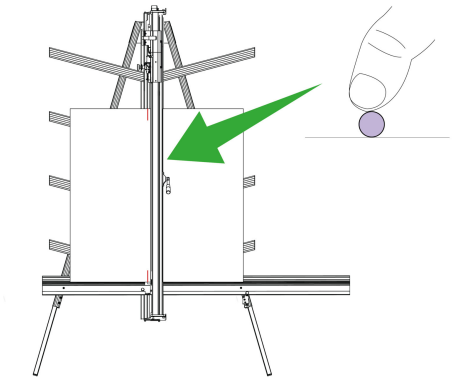

Soft materials such as Foamcore boards, lightweight card, etc. Use light to medium pressure. The underside of the clamp grips an area nearly 4cm (11/2") wide with a non-marking sponge rubber
and reasonable force can be applied. If in doubt clamp a sample first with the good surface facing outwards.



Do this gently

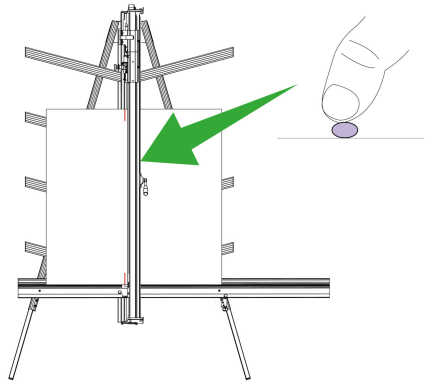

For harder materials such as PVC foam board, MDF or composite boards such as Diabond, use medium to heavy pressure.



Do this firmly

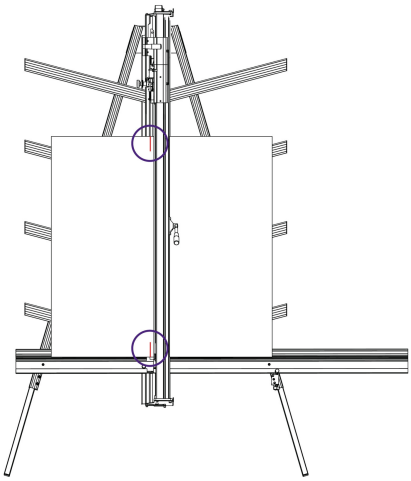

When cropping to trim lines, pencil marks, etc. (see drawing), place material in approximate position under clamp, apply light clamp pressure to allow the material to be repositioned. Align the trim marks with the edge of the sightline strip and clamp.



1.2 The multi-tool cutter and the counterbalance

The Excalibur 3S is fitted with two sliding carriages running on a vertical slideway and each carriage is fitted with a cutting head. The top carriage is fitted with a twin wheel cutter for use with rigid boards such as aluminium composite panels, MDF, hardboards. Refer to Changing the twin wheel cutter > or Using the twin wheel cutter > for more details. The lower or multi-tool cutter head has a rotating turret arrangement where either of the two cutting tools can be selected (the cutting blade or the scoring blade).

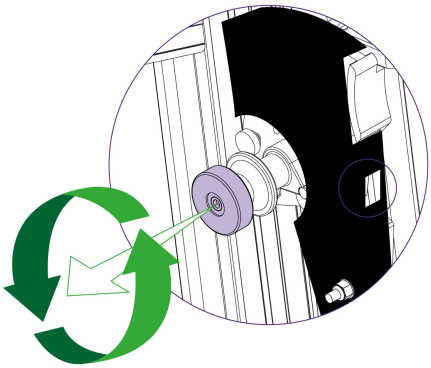

To select a different cutter pull the turret handle out to the left about 6mm (1/4") and rotate in either direction, the turret will click into the correct position for the cutter indicated. Please note that there are three positions on the turret but only two positions are used on this version of the Excalibur.

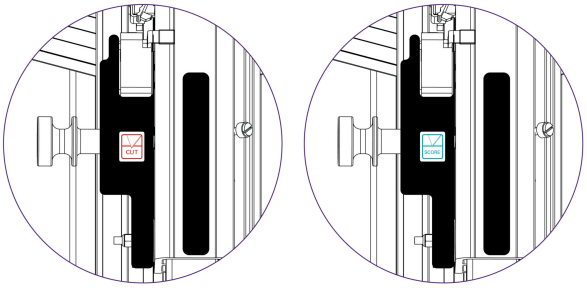

The indicator label seen in the cutter guard window shows which cutter is active.

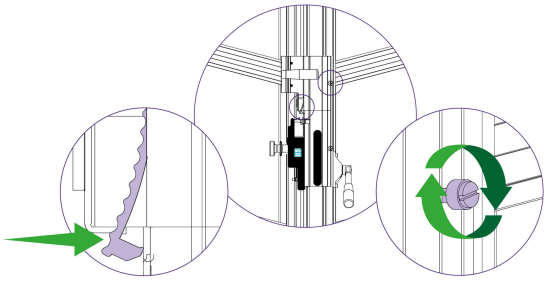

The counterbalance can be attached to either cutting head for easy, fatigue free working. it is normally attached to the twin wheel cutter but to attach it to the multi-cutter head, lock the twin wheel carriage in place using the white plastic thumb screw. Raise the multi-cutter to engage the counterbalance rocker, press the lower head of the rocker to connect it to the carriage.

1.3 Using & changing the cutting blade

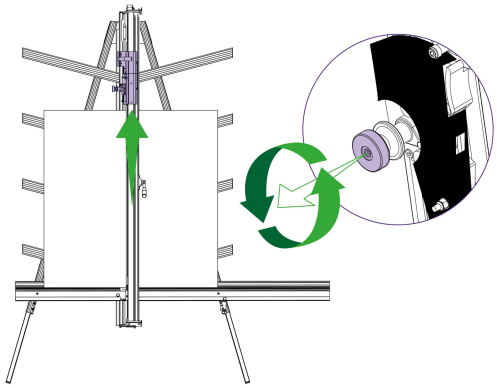

Select the cutting blade position on the turret and clamp the material in the machine. Move the cutting head beyond the top of the material to be cut.

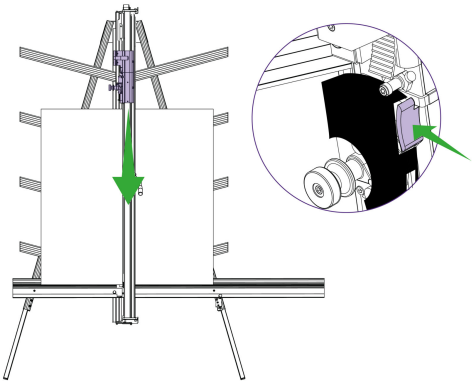

Press to engage the cutter. Draw the cutter down to the bottom of the machine where it will disengage automatically.

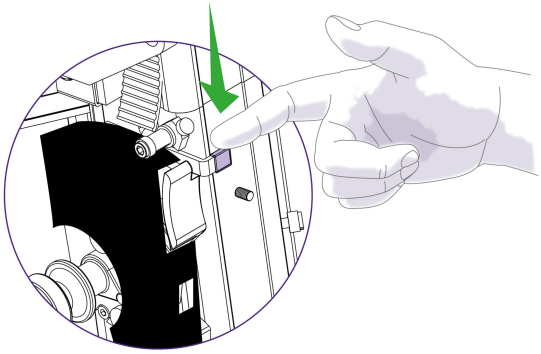

Should you engage the cutter by mistake or for any reason want to disengage the cutter without moving it to the bottom of the machine pull down the cutter and release lever.



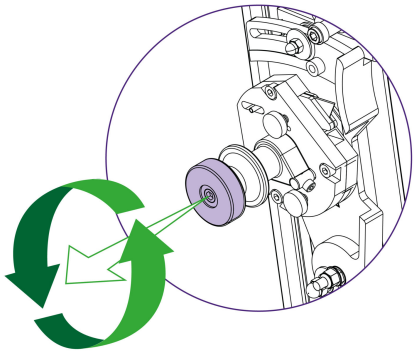

The two support plates either side of the blade are designed to give maximum rigidity of the blade when cutting hard or dense materials. To adjust the support plates swing down the cutter guard by undoing the guard locking knob. Turn the turret ½ turn until blade is pointing towards you.

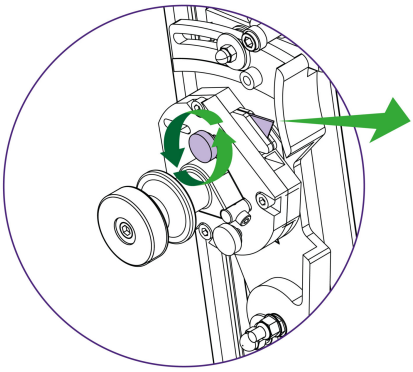

Unlock the blade clamping screw.

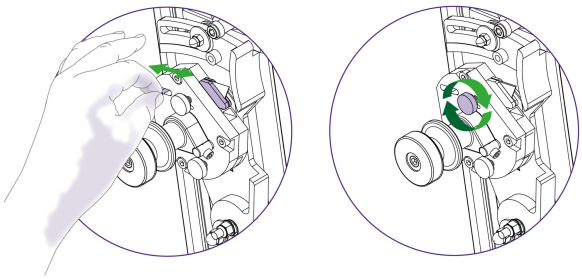

The support plates can be adjusted by sliding the black pin in the slot. Move the plates to suit the material and tighten the clamping screw once the support plates are in position.

For cutting most materials the support plates can be set about 12mm (1/2") from the blade tip



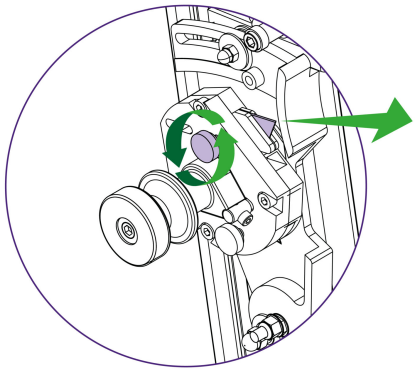

To change the cutting blade, undo the blade clamping screw a number of turns to release the blade.

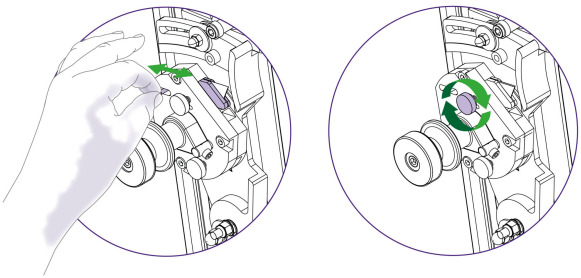

Change or turn over the blade, insert it back into the turret as far as it will go. Tighten the blade clamping screw, the safety pin will engage to hold the blade in position. At this point the position of the blade support plates can be adjusted to suit the thickness of material being cut, further tightening of the screw will clamp the blade in position.
Rotate the turret back to the cutting position. Replace the guard ensuring it is locked closed.



1.4 Changing the scoring blade

Replacement medium utility blades are available from Keencut or your distributor.

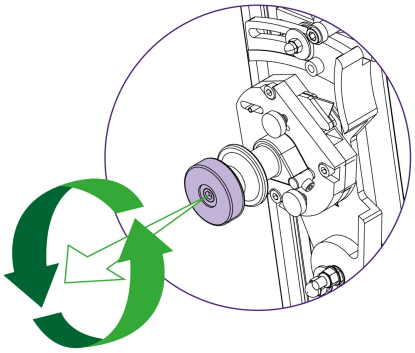

Unlock and swing down the cutter guard, rotate the turret so the scoring blade is facing outwards.

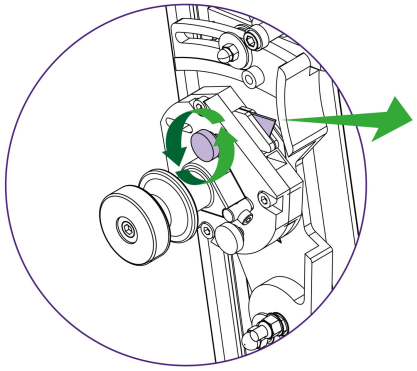

Release the blade clamping screw

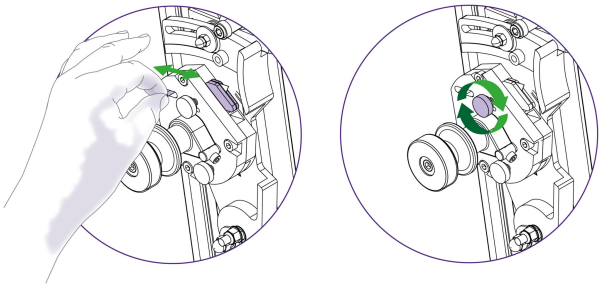

Eject the medium duty utility blade using the black ejector pin, replace the blade to the right of the clamping plate, push the blade in as far as it will go and tighten the blade clamping screw. Rotate the turret back to the cutting position. Replace the guard ensuring it is locked closed.



1.5 Changing the twin wheel cutter

Replacement wheels or cutters are available from Keencut or your distributor

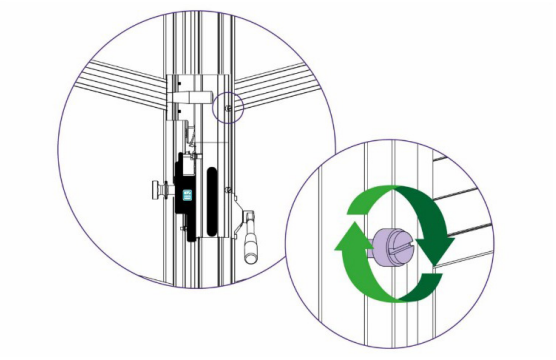

Lock the cutting head at a convenient height using the white nylon locking screw.

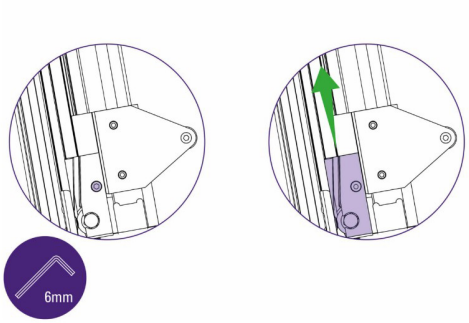

Hold the twin wheel cutter and its guard to prevent them from falling and remove the screw with a 6mm Allen (hex) key. Slide the cutter towards the top of the main body and lift out.

