Contents

1. Using the Creaser tool head 2
1.1 Different creasing wheels 2
1.2 Change the creasing wheels 3
1.3 Creasing technique 5

1. Using the Creaser tool head

1.1 Different creasing wheels

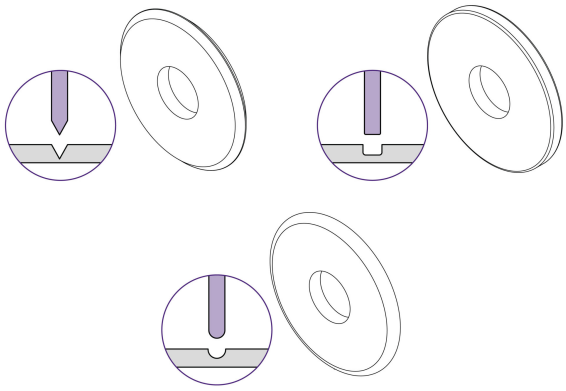

The three creasing wheels supplied with the Creaser tool head will each produce a different style of crease. Experiment on small samples of your material to see which gives best results.

1.2 Change the creasing wheels

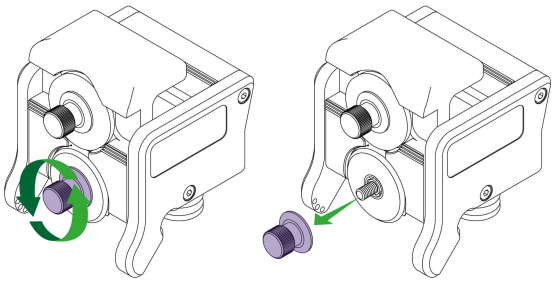

Remove the lower clamping knob.

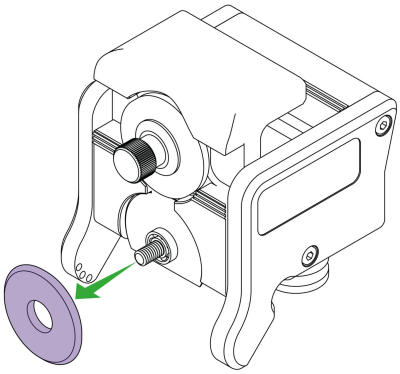

Remove the creasing wheel leaving the bearing and clear plastic shim in place.

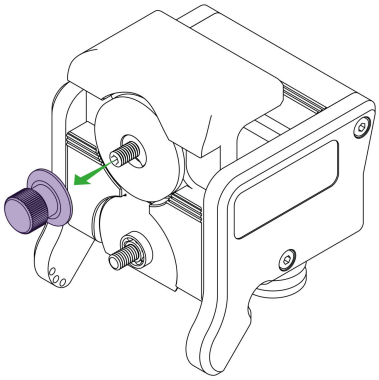

Remove the upper clamping knob.

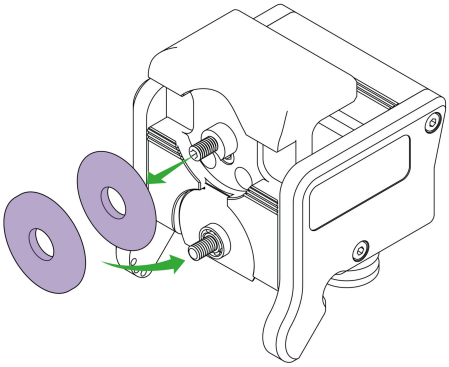

Choose the creasing wheel you would like to use and exchange it with the lower wheel. Replace both clamping knobs.

1.3 Creasing technique

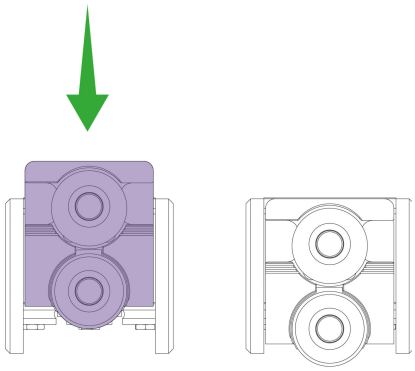

Align your material in the machine, apply downward pressure to the wheel holder and move the cutting head along to create the crease line. Adjust the hand pressure and number of strokes accordingly, you can crease in either direction.